S21MA7-P03LJN0-657S

odu medi snap®

straight push pull plug for bend relief

size: 1, IP50, keying: a, number of contacts: 3, solder cup, contact type: sockets

Basic information

Part number	S21MA7-P03LJN0-657S
Category	connector
Type of connector	plug
Assembly situation	straight
Size	1

Contact insert description

Special features	high voltage , iec 60601 1 2 mopp & 2 moop
Number of contacts	3
Contact type	sockets
Contact diameter	0.9 mm
Termination type	solder cup
Termination diameter	1.4 mm
Wire cross section AWG	AWG 18

Technical information

Max. current single contact	10 A	IEC 60512-5-2:2002 (DIN EN 60512-5-2:2003)
Max. current insert	10	VDE 0298-4:2003
Test voltage	mated: 3.5 kV AC; unmated 2.1 kV AC	EIA-364-20F:2019-02
Max. creepage distance (contact to contact)	mated: 4.7 mm; unmated: 2.0 mm (Contact to contact)	
Max. creepage distance (contact to housing)	IEC 60601-1: 2MOPP. 2MOOP*	
Max. clearance distance (contact to contact)	mated: 4.7 mm; unmated: 2.0 mm (Contact to contact)	
Max. clearance distance (contact to housing)	IEC 60601-1: 2MOPP. 2MOOP*	

safety text hv

Cable description

Cable outlet	cable_bend_relief
Min. cable diameter	5.3
Max. cable diameter	6.5

Mechanical and environmental data

Locking principle	push_pull
Keying	a
Mating cycles	2000
IP class	IP50
Max. operating temperature	120 °C
Min. operating temperature	50 °C

Material and surface treatments

Material	psu_gray
Insulator material	peek
Contact material	cu_alloy_with_gold_finish
Color option (Front or back nut)	gray

Insulator materials MEDI-SNAP®

psu_peek

Graphics and technical drawings

DIMENSIONS

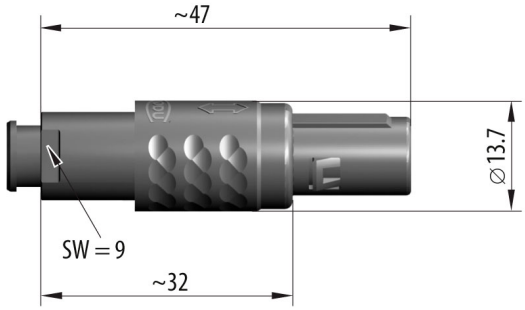

CODING: 40 °

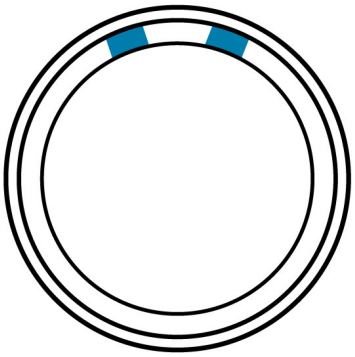

POSITIONS: 3 positions

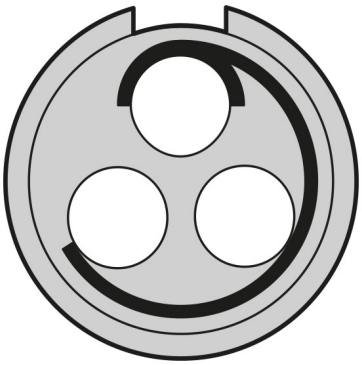

Further technical information and downloads

[3D-File (STP File)]

[Assembly Instruction]