GCCWCM-P04WBC0-000L

odu amc® hd

receptacle with screw lock for rear panel mounting

size 00 ip6k8 ip6k9k coding c blue 4 contacts sockets solder cup signal transmission

Basic information

Part number	GCCWCM-P04WBC0-000L
Category	connector
Type of connector	receptacle
Assembly situation	rear panel mounting
Size	00

Contact insert description

Transmission type	Signal
Number of contacts	4
Contact type	sockets
Contact diameter	0.3 mm
Termination type	solder cup
Termination diameter	0.45 mm
Wire cross section AWG	AWG 28

Technical information

Nominal current single contact	1 A	IEC 60512-5-2:2002 (DIN EN 60512-5-2:2003)
Max. current insert	1 A	VDE 0298-4:2013
Test voltage	0.9 kV DC	EIA-364-20F:2019-02

Mechanical and environmental data

Locking principle	screw lock
Keying	c
Mating cycles	5.000
IP class	IP68 / IP6K9K
Max. operating temperature	125 °C
Min. operating temperature	-51 °C
Tightening torque	0.5 Nm
Weight	3.3 g

ip protection class refers to mated condition

Material and surface treatments

Material	cu_alloy_with_ruthenium_finish
Contact material	cu_alloy_with_gold_finish

DIMENSIONS:

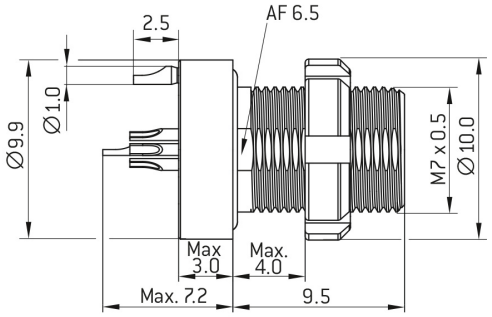

CODING:C

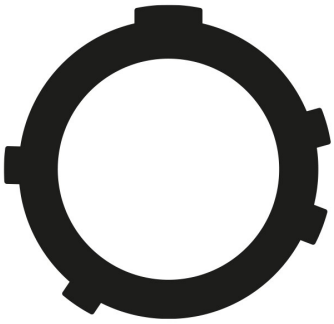

POSITIONS: 4 positions

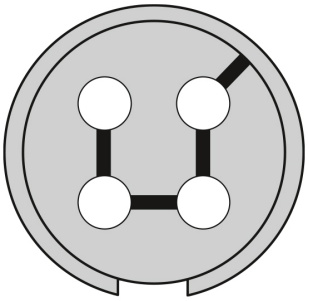

PANEL CUT OUT:

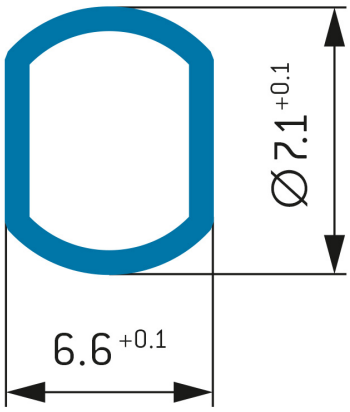

Further technical information and downloads

3D-File (STP File)
Technical specifications